# SATRON VOM Turbidity and solids content sensor

The SATRON VO analyzer allows savings to be obtained in process industries such as:

- Transition monitoring for startup, changeovers and shut-down.
- CIP return line monitoring.
- Automation of yeast harvesting in breweries.
- Integrity monitoring of filters.

The transmitter communicates via 4...20mA and digitally using the HART® protocol.

## TECHNICAL SPECIFICATIONS

**Measuring range and span**
See Selection Chart.

**Zero and Span adjustment**
Zero elevation: Calibrated span is freely selectable on the specified range depending from the desired option. This can be made by using keyboard (display option) or VoAdvisor software with Hart modem.

**Damping**
- Time constant is continuously adjustable 0.01 to 60 s.

**Repeatability**
- 0.1% from maximum span.

**Temperature limits**
Ambient: -30 to +80 °C
Process N type: -5 to +100 °C
(120 °C for 10min)
Process H type: -5 to +140 °C
(160 °C for 30 min)
Shipping and storage: -40 to +80 °C.

**Output** 3-wire (3W), 4-20 mA

**Supply voltage**
Nominal 24 VDC, (21,6 - 27,6V) 200mA

**Humidity limits** 0-100 % RH

**EMC directive 2004/108/EC**
- EN 61326-1:2005

**CONSTRUCTION**
***Materials:***
Sensing element [1]: AISI316L, Duplex (EN. 1.4462), Hast. C276/C22, or Titanium Gr2.
Surface quality: Polished Ra <0,8µm
Lens: Sapphire or Spinel ceramic

Coupling [1]: AISI316L, Duplex (EN 1.4462), Hast.C276 or Titanium Gr2

**Pressure class:**
- PN40
- Test pressure -1 to 30 bar

**Housing with display,**
codes **N0S & N0T:**
Housing: AISI303/316, Seals: Nitrile-rubber and Viton®,
Nameplates: Polyester

**Housing with M12 connector,** code **H0T:** Housing: AISI303/316, Seals: Viton® and NBR.

**Housing with PLUG DIN 43650 connector,** code **H0S:**
Housing: AISI303/316, Seals: Viton® and NBR.
PLUG connector: PA6-GF30 jacket, Silicone rubber seal, AISI316 retaining screw.

**Connection hose between sensing element and housing**
Codes **L** and **R** :
PVC signal cable or hose protected with PTFE/AISI316 braiding

**Calibration**
For customer-specified range with minimum damping. (If range is not specified, transmitter is calibrated for maximum range.)

**Electrical connections**
Housing with PLUG connector, code **H0S:**
Connector type DIN 43650 model AF; Pg9 gland for cable; wire cross-section 0.5 to 1.5 mm$^2$.

Housing with M12 connector, code **H0T**: M12 plug connector

Housing with display, code **N0S:**
Connector type DIN 43650 model AF; Pg9 gland for cable; wire cross-section 0.5 to 1.5 mm$^2$.

Housing with display, code **N0T**: M12 plug connector

**I/O-connections**
bout1-3
Relay, grounding contact

| | |
|---|---|
| Maximum voltage | 35 V |
| Maximum current | 50 mA |
| Maximum leakage current | 10 µA |

bin1-3

| | |
|---|---|
| NC (no connection) | OFF |
| 0...2 V | ON |

Minimum values for switch in use

| | |
|---|---|
| Voltage | 16 V |
| Current | 4 mA |
| Leakage current | 1 mA |

Current output1

| | |
|---|---|
| Range | 3.5...23 mA |
| Maximum load | 600 Ω |
| Factory setting | 4...20 mA |

Current output2
Internal power supply
Current output 2 has same ground as binary IO

| | |
|---|---|
| Maximum load | 400 Ω |
| Range | 3.5...23 mA |
| Factory setting | 4...20 mA |

External power supply
Current output 2 is galvanically isolated

| | |
|---|---|
| Maximum supply voltage | 35 VDC |
| Range | 3.5...23 mA |
| Factory setting | 4...20 mA |

Maximum load, See picture below
Maximum isolation voltage 100 VDC

**Process connections**
- With G1 connecting thread
- Tri-Clamp 25/38 and 40/51
- Tuchenhangen Type "N"
- 1" retractable "B1"

**Protection class:** See Selection chart.

**Weight**

| | |
|---|---|
| Housing with PLUG DIN43650 connector **(H0T )**: | 0.9 kg |
| Housing with M12 connector **(H0S )**: | 0.9 kg |
| Housing with display **(N0S** & **N0T)**: | 1.3 kg |
| Remote Housing (**L):** | 2.5 kg |
| Remote sensor (**R):** | 2.5 kg |

Min. load using HART®-communication 250 R

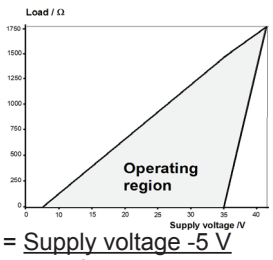


R max = Supply voltage -5 V
I max

I max = 20,5 mA
I max = 22,5 mA
(when the alarm current 22,5 mA is on)
Current output 2
External power supply

[1] Parts in contact with process medium

SATRON instruments
Satron Instruments Inc., P.O.Box 22, FI-33901 Tampere, Finland
Tel. +358 207 464 800, Telefax +358 207 464 801, www.satron.com

## Dimensions and Housing types VOM

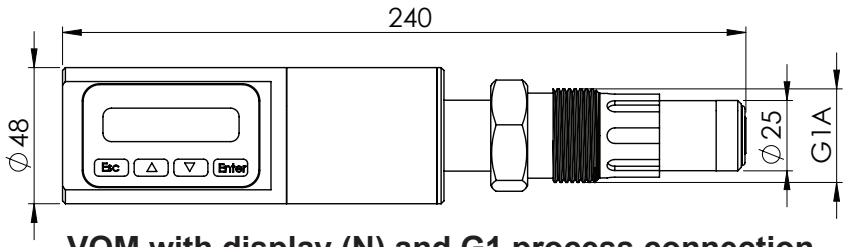


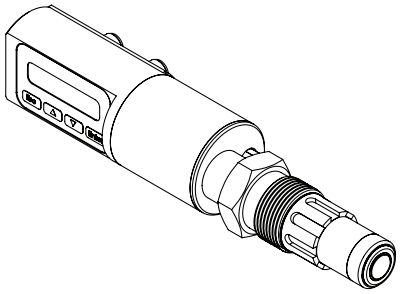

**VOM with display (N) and G1 process connection**

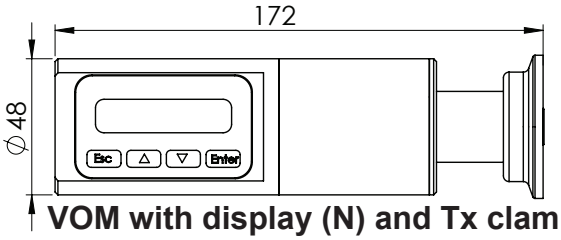


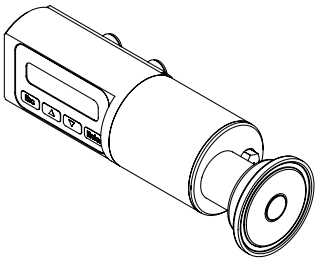

**VOM with display (N) and Tx clamp connection**

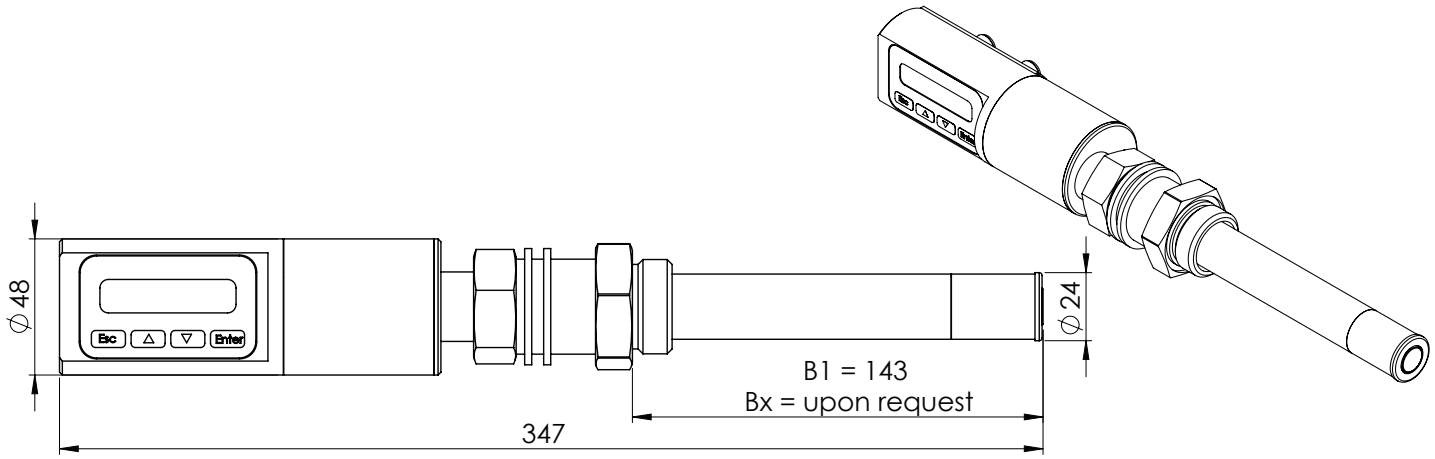


**VOM with display (N) and B1 / BX ball valve insertion process connection**

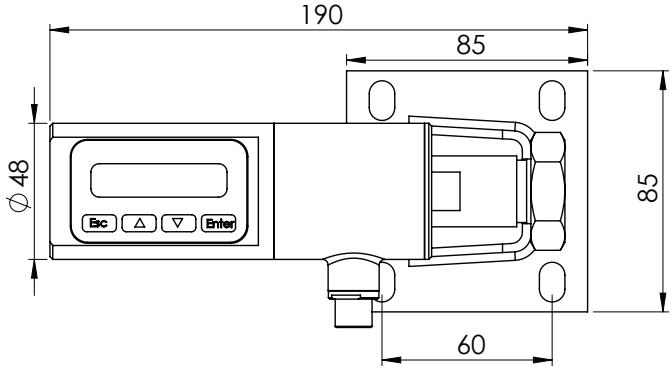


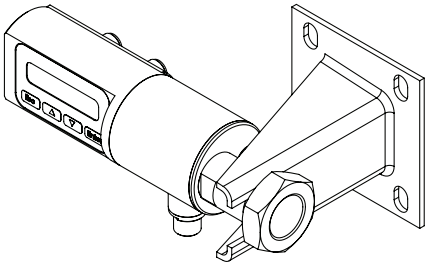

**VOM with remote measuring probe and PVC or PUR M12 cable (NRT43 & NRT12)**

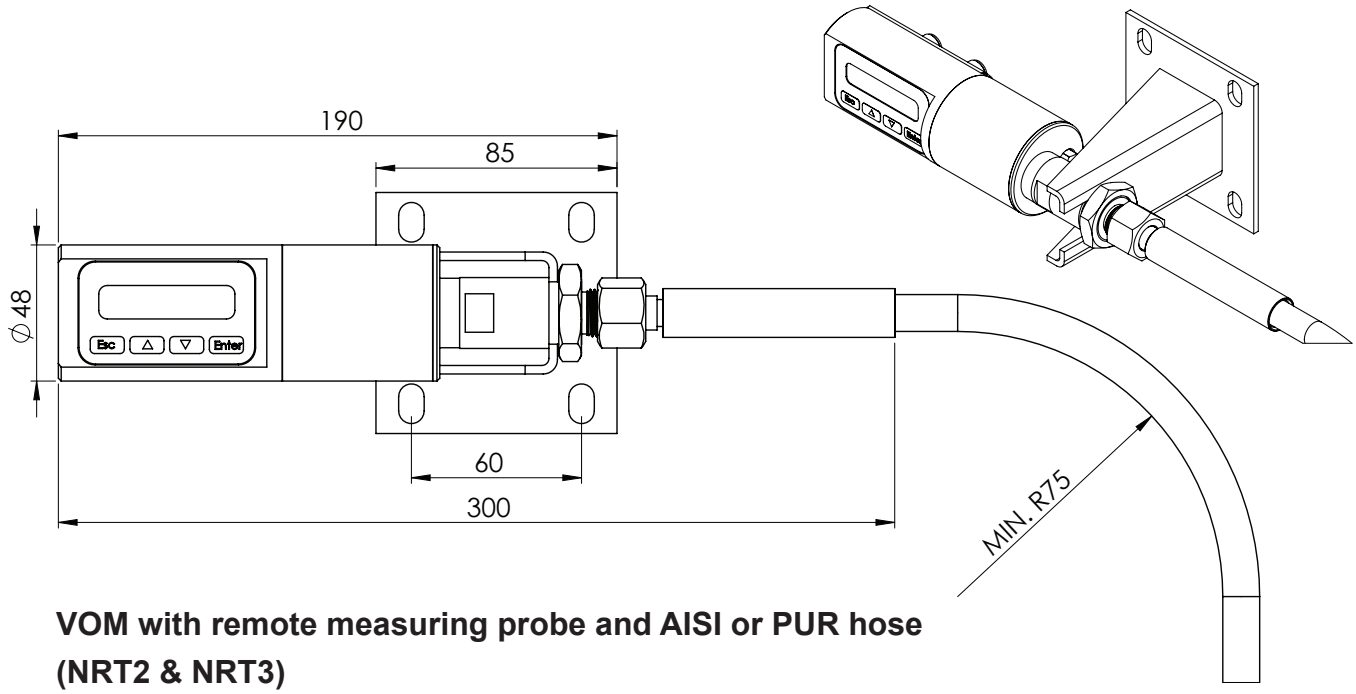


**VOM with remote measuring probe and AISI or PUR hose (NRT2 & NRT3)**

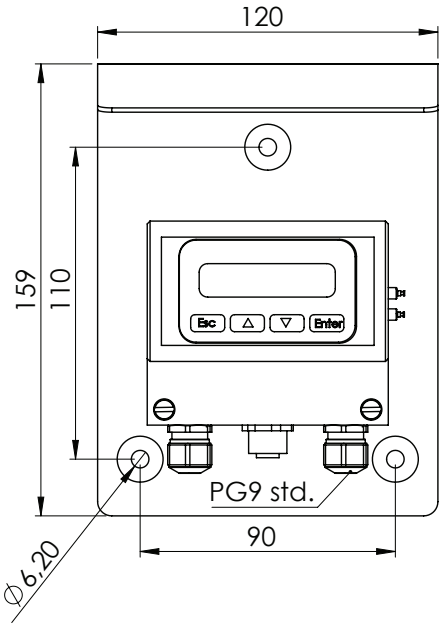


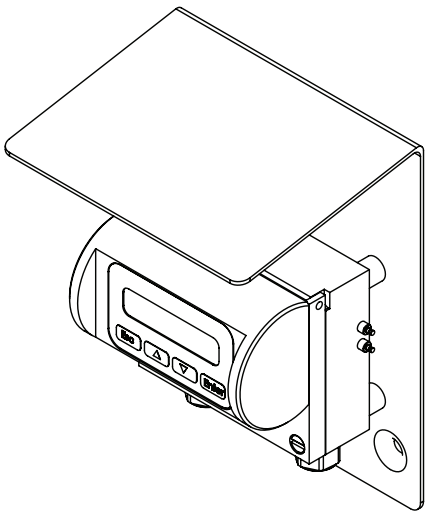

**Remote electronics housing with display (L) T1325016**

# SATRON VO Turbidity and solids content sensor

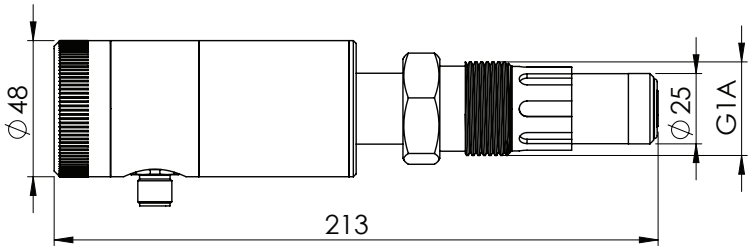


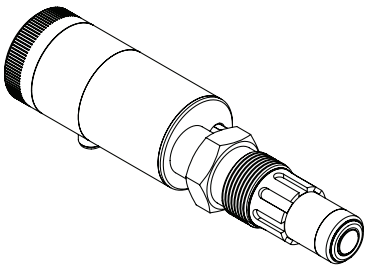

**VOM with no display (H) and G1 process connection**

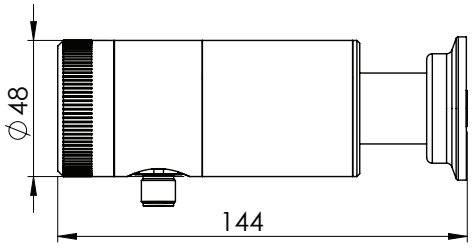


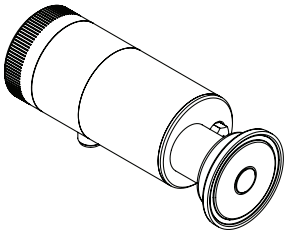

**VOM with no display (H) and Tx clamp connection**

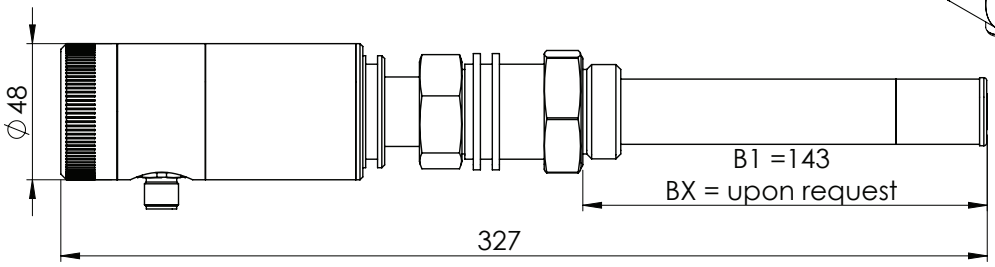


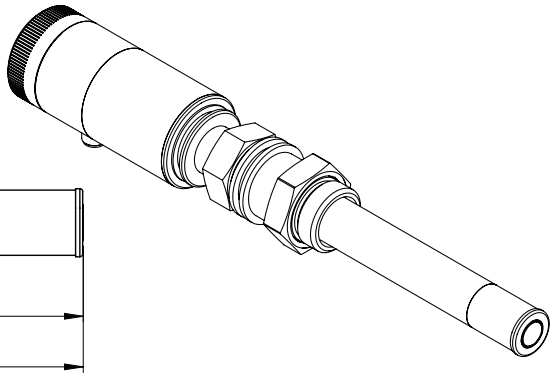

**VOM with no display (H) and B1 / BX ball valve insertion process connection**

## Process connection details

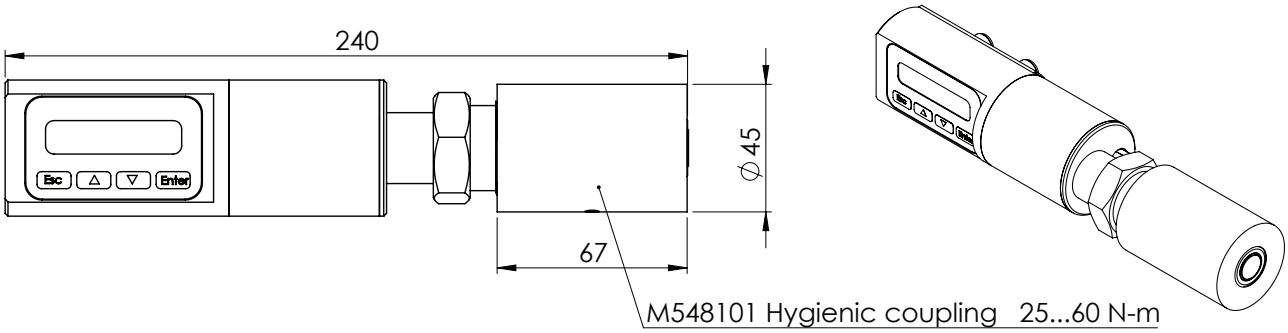


**VOM G1 connected to M548101 hygienic coupling. (Flush mounted) EHEDG, 3A**

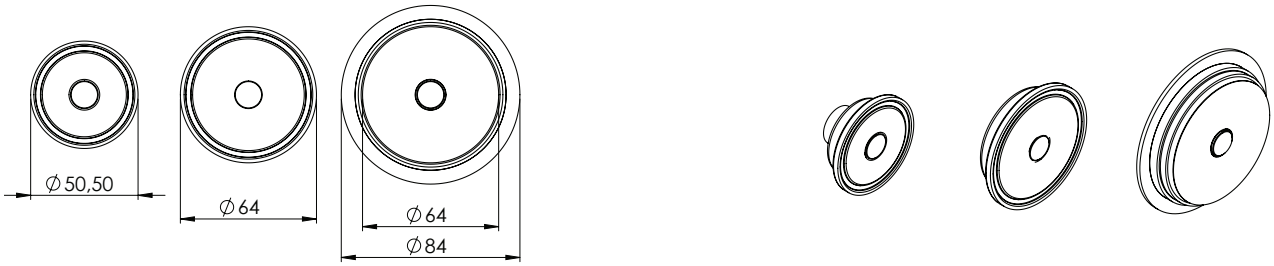


**VOM with Triclamp and Tuchenhagen process connection TA, TB (ISO 2852) and TN**

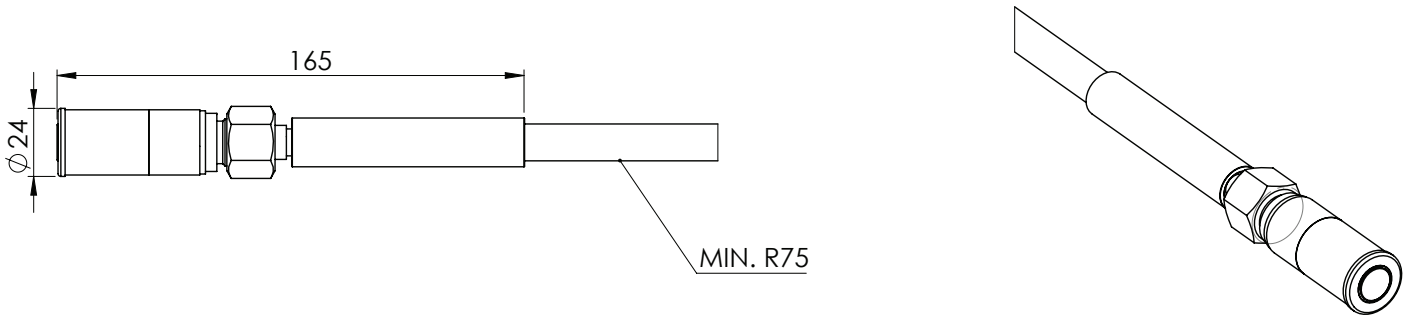


**VOM with H1 fixed mounting tube process connection and AISI316L hose, "21.H1"**

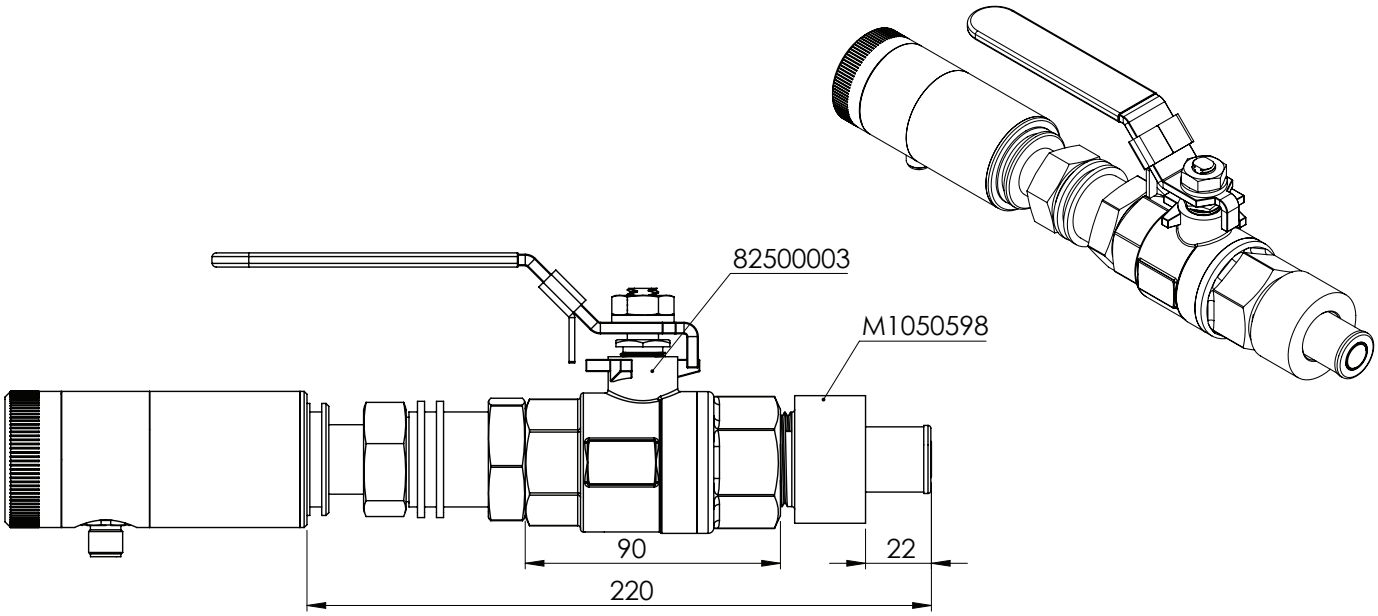


**VOM B1 connected to Ball valve 8250000 and M1050598 coupling**

# SATRON VO Turbidity and solids content analyzer

## Instructions and spare parts that are according and within the 3-A appliance

46 - 03

**Welding the coupling**

These instructions apply to hygienic welded couplings; welding the G1 standard coupling is described here as an example.

• Place the coupling in the mounting hole as shown in Fig. 1-4. Make sure the leakage detection port is down. Then weld with several runs so to prevent the coupling's oval distortion and tightness problems.
The inside welding must be cleaned, and polished with an end result of Ra <0,8

• The analyzer must be **out of the coupling** while the coupling is welded.You can use the shut-off plug shown in Fig. 1-5 to shut the coupling. The plug protects the coupling's sealing face and permits the starting of the process without the transmitter.

• It is always recommendable to use the welding assistant (M1050450) while welding the coupling to prevent any distortions due to heat.

• Do not make weld grounding via any analyzer's body!

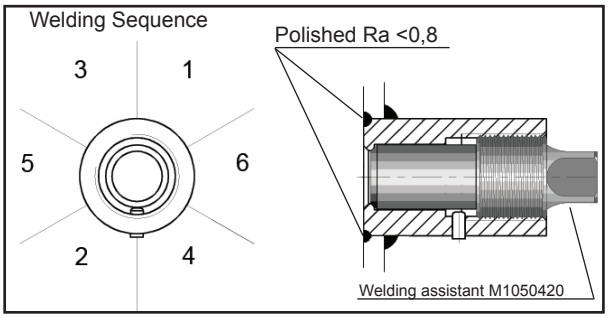


**Mounting the analyzer on the coupling**

**Procedure**

• Make sure that the coupling's sealing face is clean.

• Remove the orange protective plug from the analyzer head.

• Insert the analyzer **in a straight line** into the coupling, so that the guide groove on the transmitter aligns with the stop pin on the coupling. The analyzer settles into position when the groove and pin are aligned, and will be prevented from rotating in the coupling.

**When inserting the analyzer, be careful not to damage the edge of the lens on the edges of the coupling or on the end of the stop pin!**

• Lock the transmitter in position by screwing the hex nut fully home. Finger tightness is sufficient to tighten the sealing faces. However, we recommend final tightening with a tool to eliminate the effect of vibration and other such factors. Apply 60±20 Nm torque.

**Do not use sealing tape etc. on threaded connection!**

# SATRON VO Turbidity and solids content sensor

## Spare-parts VOM G1

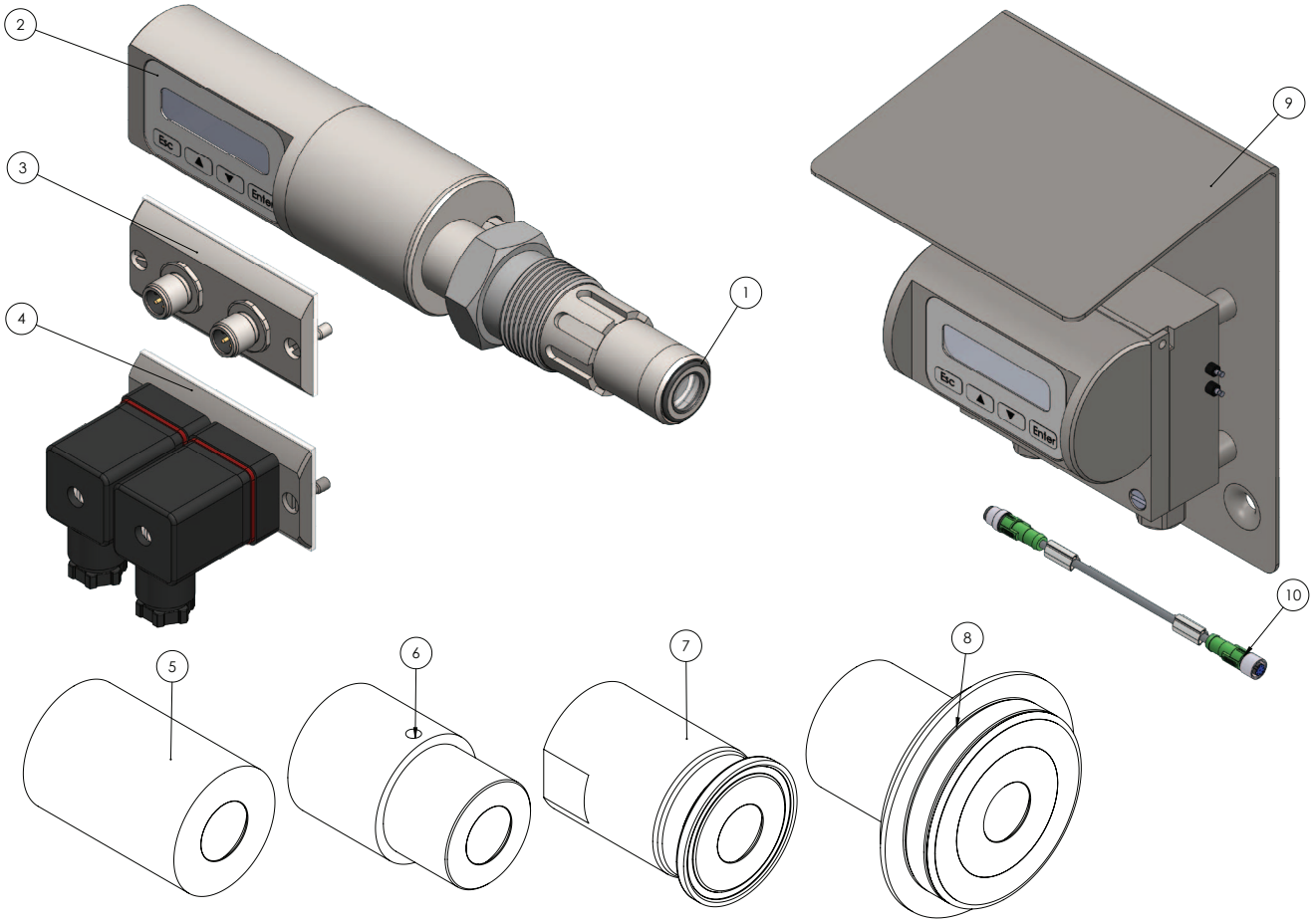


| No. | Part name | Order code | Note | |
|---|---|---|---|---|
| 1 | O-ring EPDM | 80031720 | 3A 18-03 Class **II** | (Do not exceed above 8% fat content). |
| 1 | O-ring FPM (Viton®) | 80011720 | 3A 18-03 Class **I** | |
| 1 | O-ring FFPM(Kalrez®) | 80041717 | 3A 18-03 Class **I** | |
| 2 | Sticker | T1325215 | | |
| 3 | Plug cover M12 | T1325031 | | |
| 4 | Plug cover DIN43650 | T1325003-K48 | | |
| 5 | 45/G1" Welding adapter | M548101 | | |
| 6 | 38/G1" Welding adapter | M1050577 | | |
| 7 | Tri-clover 25/38 ISO2852 | M1050206 | | |
| 7 | Tri-clover 40/51 ISO2852 | M1050222 | | |
| 7 | Tri-clover 63.5 ISO2852 | M1050224 | | |
| 8 | Tuchenhagen / Varivent DN25 | M1050090 | | |
| 8 | Tuchenhagen / Varivent DN50 | M1050091 | | |
| 8 | Tuchenhagen / Varivent DN65,5 | M1050092 | | |
| 9 | Remote Display Unit RDU | T13250016 | | |
| 10 | L-Housing data cable 10m PVC | 70000450 | | |
| 10 | L-Housing data cable 15m PUR | 70000440 | | |

# SATRON VO Turbidity and solids content analyzer

## Selection Chart

| Adjustability | Span, min | Span, max | Measuring range |
|---|---|---|---|
| VOM | 1000 NTU | 25 000 NTU | 0....25 000 NTU |

**Process temperature limits**

| | |
|---|---|
| **N** | Normal version -5...+100 °C (120 °C for 10 minutes) |
| **H**(**) | High temperature -5...+140 °C (160 °C for 30 minutes) |

**Output**

| | |
|---|---|
| **S** | 4-20mA DC/HART® for 50Hz (Europe) |
| **J** | 4-20mA DC/HART® for 60Hz (USA / Japan) |

**Material of wetted parts**

| Body | | Lens | | Seal | | 3A 18-03 |
|---|---|---|---|---|---|---|
| **2** | AISI316L | **2** | Sapphire | **1**(***) | EPDM | Class II |
| **3** | Hast. C 276 | **4** | Spinel | **2** | FPM (Viton®) | Class I |
| **6** | Titanium Gr2 | | | **3** | FFPM (Kalrez®) | Class I |
| **8** | Duplex (EN 1.4462) | | | **4** (*) | PTFE (Teflon) | |
| **9** | Peek | | | | | |

**Housing type**

| | |
|---|---|
| **N** | Housing with display and pushbuttons |
| **H** | Housing with, no display, (only one mA output) |
| **L** | Remote electronics housing with display |

**Probe type**

| | |
|---|---|
| **0** | No remote probe |
| **R** | Remote measuring probe (not available with L housing), IP68 |

**Connection type**

| | |
|---|---|
| **S** | DIN43650 with PG9, IP66 |
| **T** | M12, IP67 |
| **V** | PG9 (always with L housing), IP66 |

**Cable Material**

| | |
|---|---|
| **0** | No VOD, L or R selected |
| **1** | PUR cable. |
| **2**(*) | AISI316L braided PTFE hose. |
| **3** | Steel reinforced PUR hose. |
| **4** | PVC cable (std.) |

**Cable length**

| | | | | | |
|---|---|---|---|---|---|
| **0** | No VOD or L, R option selected | | | | |
| **1** | 5 M. | **3** | 15 M. (PUR std.) | **5** | 25 M. |
| **2** | 10 M. (PVC std.) | **4** | 20 M. | **...** | |

**Light source**

| | | | |
|---|---|---|---|
| **6** | 640nm | **8** | 950nm |
| **7** | 880nm | **9** | IR+ |

**Process connections**

| | |
|---|---|
| **G1** | Standard G1A thread + Oring |
| **TA** | Tri-Clamp 25/38 (ISO 2852) |
| **TB** | Tri-Clamp 40/51 (ISO 2852) |
| **TN** | Tuchenhagen "N" type DN50 |
| **H1** | Fixed mounting tube, (see H1 picture) |
| **HX**(*) | Fixed mounting tube, (specify length) |
| **B1**(*) | G1A ball valve insertion. Extension 19cm diameter ø 24mm |
| **BX**(*) | G1A ball valve insertion. Extension by request diameter ø |

☐☐☐☐☐☐☐☐☐☐☐ / ☐☐☐

**Documentation**

**Calibration certificate** **AE** English

**Installation and operating instructions** **IE** English **IF** Finnish **FR** French

**Material certificates**

| | |
|---|---|
| **0** | No material certificate |
| **MC1** | Raw material certificate without appendices, in accordance with SFS-EN 10204-2.1 (DIN 50049-2.1) standard |
| **MC2** | Raw material certificate for wetted parts, in accordance with SFS-EN 10204-2.2 (DIN 50049-2.2) standard |
| **MC3** | Raw material certificate for wetted parts, in accordance with SFS-EN 10204-3.1 B (DIN 50049-3.1 B) standard |

* **Not EHEDG certified & Not within the 3A approval**
** **Only in combination with Quartz, Sapphire lens and Kalrez Seals. And only 880nm**
*** **Do not exceed above 8% fat content.**

CE CERTIFIED EHEDG TYPE EL - CLASS I JANUARY 2010 — 3-A 46 - 03 — SGS C US 800029 — EC 1935/2004

*We reserve the right for technical modifications without prior notice.*

HART is the registered trademark of HART Communication Foundation.
Pasve is the registered trademark of Satron Instruments Inc.
Hastelloy is the registered trademark of Haynes International.
Viton is the registered trademark of DuPont Down Elastomer.
3-A is a registered mark owned and administered by 3-A SSI.

SATRON instruments